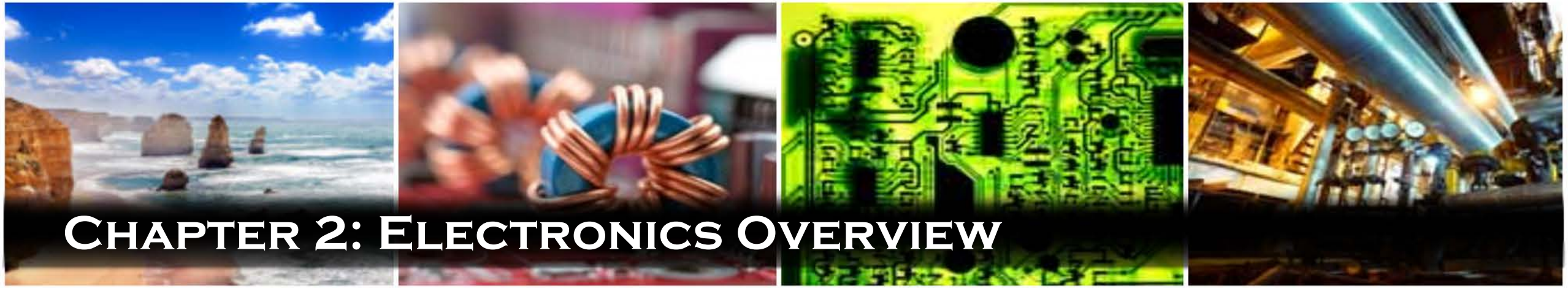

Chapter 2: Electronics Overview

IoT Fundamentals
Connecting Things 2.0
Instructor Training

Education Service Center Region 11
Academy Support/Instructor Training Center

General Rules

- **Direct Current (DC)**
  - Current only flows in one direction
  - Flows from negative to positive
  - Red wire indicates positive (incoming)
  - Black wire indicates negative (outgoing)

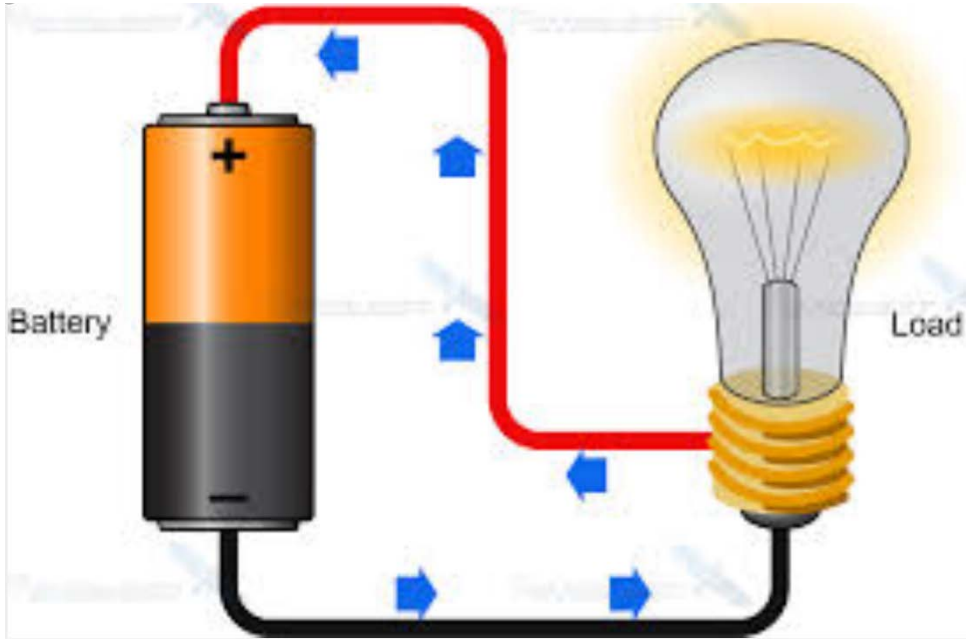

- **Alternating Current (AC)**
  - Current alternates flow in both directions
  - Black wire indicates positive
  - White wire indicates negative

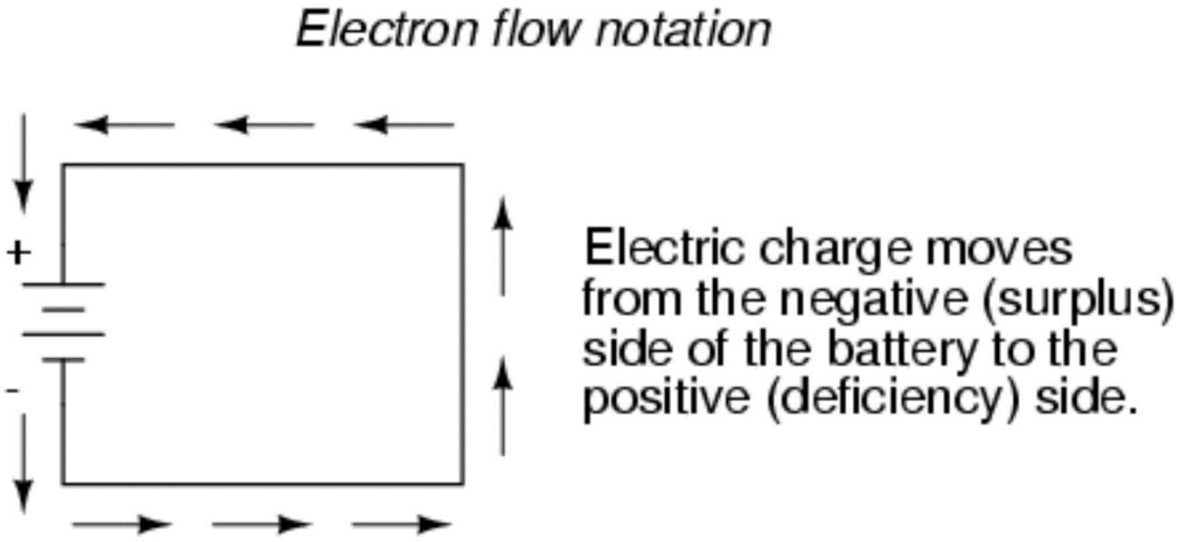

DC Current Theory

- All materials are made up from atoms, and all atoms consist of protons, neutrons and electrons. Protons, have a positive electrical charge. Neutrons have no electrical charge while Electrons, have a negative electrical charge. Atoms are bound together by powerful forces of attraction existing between the atoms nucleus and the electrons in its outer shell.
- When these protons, neutrons and electrons are together within the atom they are happy and stable. But if we separate them from each other they want to reform and start to exert a potential of attraction called a **potential difference**.
- Now if we create a closed circuit these loose electrons will start to move and drift back to the protons due to their attraction creating a flow of electrons. This flow of electrons is called an **electrical current**. The electrons do not flow freely through the circuit as the material they move through creates a restriction to the electron flow. This restriction is called **resistance**.
- Then all basic electrical or electronic circuits consist of four separate but very much related electrical quantities called: Voltage (V), Current (I), Resistance (Ω), and Power (W).

Voltage

- **Voltage** (V) is the potential energy of an electrical supply stored in the form of an electrical charge. Voltage can be thought of as the force that pushes electrons through a conductor and the greater the voltage the greater is its ability to “push” the electrons through a given circuit.
- The difference in voltage between any two points, connections, junctions, or nodes in a circuit is known as the **Potential Difference** or **Voltage Drop**.
- **DC Voltage** produces a constant voltage source with one volt being defined as the electrical pressure required to force an electrical current of one ampere through a resistance of one Ohm.
- Batteries or power supplies are mostly used to produce a steady DC voltage source such as 1.5V, 3.3V, 5V, 9V, 12V, or 24V in electronic circuits and systems.

Current

- **Current** (I) is the movement or flow of electrical charge and is measured in **Amperes** (A), symbol I for *intensity*. It is the continuous and uniform flow of electrons around a circuit that are being “pushed” by the voltage source.
- An amp is defined as the number of electrons passing a certain point in the circuit in one second.

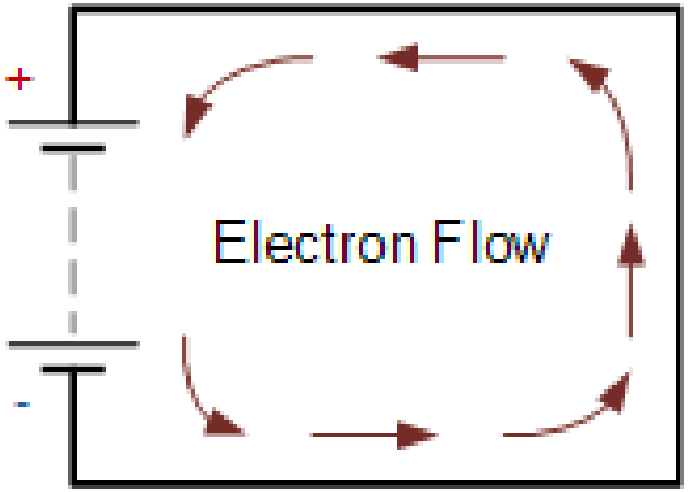

Electrons flow from the negative (-) terminal to the positive (+) terminal

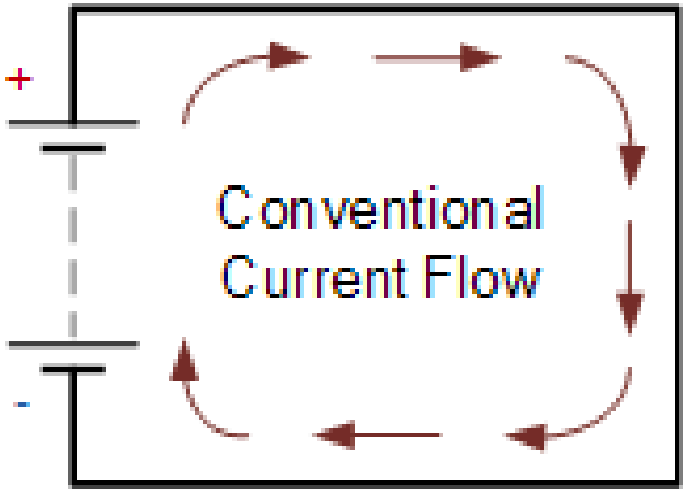

Conventional current flow assumes that the current flows from the positive to the negative terminal

Resistance

- **Resistance** (R) is the capacity of a material to resist or prevent the flow of current within a circuit.
- Resistance is a circuit element measured in **Ohms**, Greek symbol Omega (**Ω**). Note that resistance cannot be negative in value only positive.
- A resistor is classed as a passive circuit element and as such cannot deliver power or store energy. Instead resistors absorbed and dissipate power as heat and light.

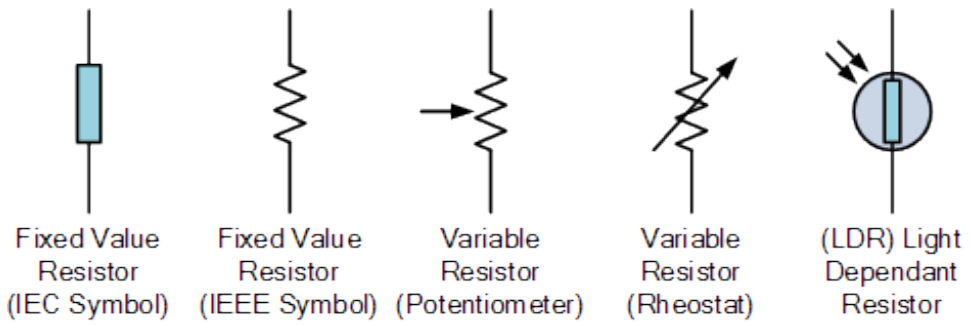

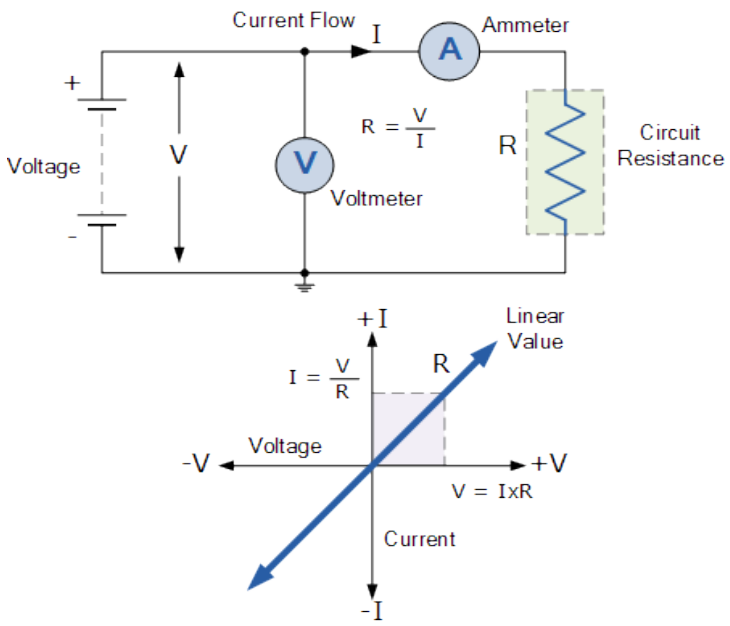

Series vs Parallel

- In a **series** circuit, all components are connected end-to-end, forming a single path for electrons to flow

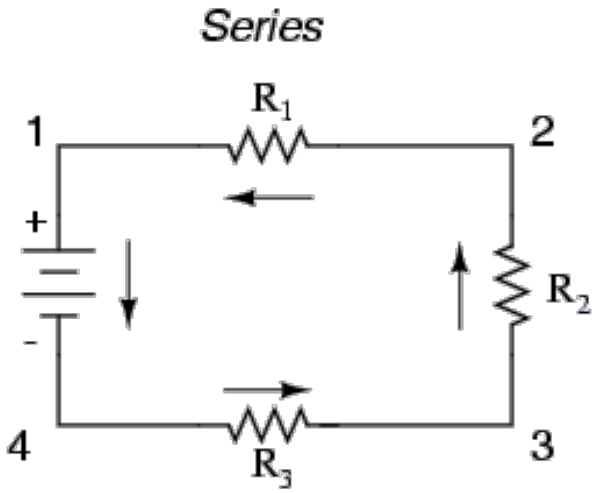

- In a **parallel** circuit, all components are connected across each other, forming exactly two sets of electrically common points
  - A **branch** in a parallel circuit is a path for electric current formed by one of the load components (such as a resistor)

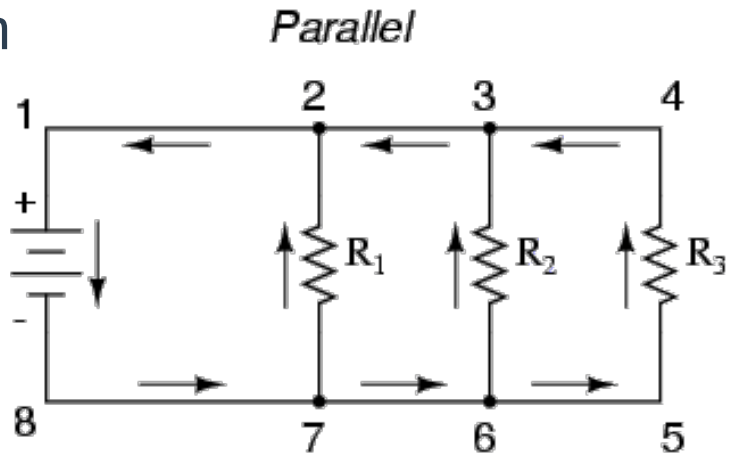

CIRCUIT COMPONENTS

Resistor

- An electronic component that limits the flow of electrons
- Reduces electrical current by a precise amount
- Are NOT polarized (reversible)
- Dissipates energy in the form of heat
- Measured in Ohms (Greek symbol Omega) Ω
- A resistor's symbol looks like a zigzag line and typically has its value written next to it

Schematic Symbol

Photoresistor

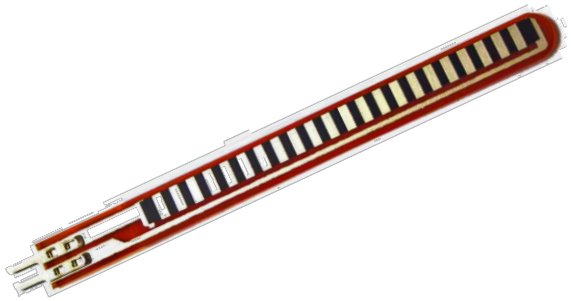

Flex Sensor
Variable Resistor

Resistor Size

- Determine by looking at the packaging
- Deciphering the colored stripes from left to right towards the tolerance marking
- Typically see four stripes
- Reading a resistor with four stripes:
  - The first two stripes are combined together to form a number between 1 and 99
  - The third marking is the multiplier
  - The last marking determines the tolerance:
    - +/- 5% - indicated by a gold band on the far right
    - +/- 1% - indicated by a brown band on the far right

330 Ω

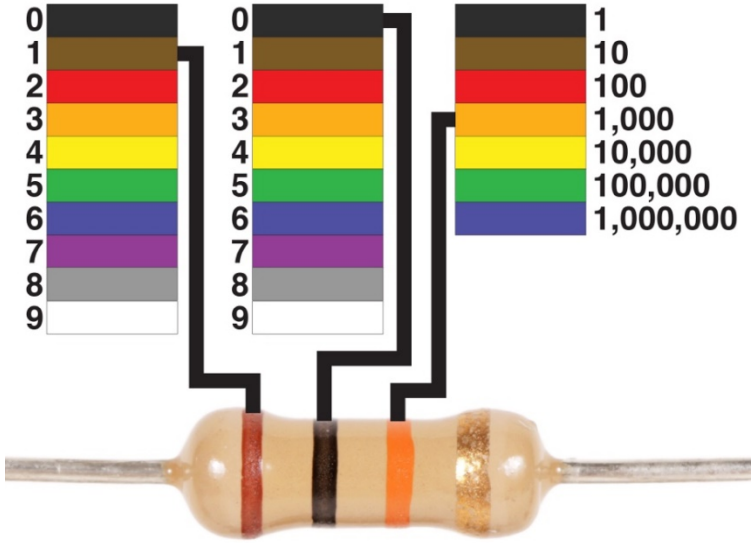

10 X 1,000 = 10kΩ

Making a Better Connection

- I have found that if you crimp each legs of the resistor back by 3/8”, it will make better contact with the breadboard

Diodes

- An electronic component that only allows electricity to flow through in one direction
- Primary role is to route electricity
- Prevents an electrical signal from taking unwanted or unexpected routes within the circuit
- Are polarized
- Have an **anode** (positive side) and **cathode** (negative side)
- Current flows from the cathode to the anode and never the opposite direction
- You can tell the difference because the cathode has a line painted around one end

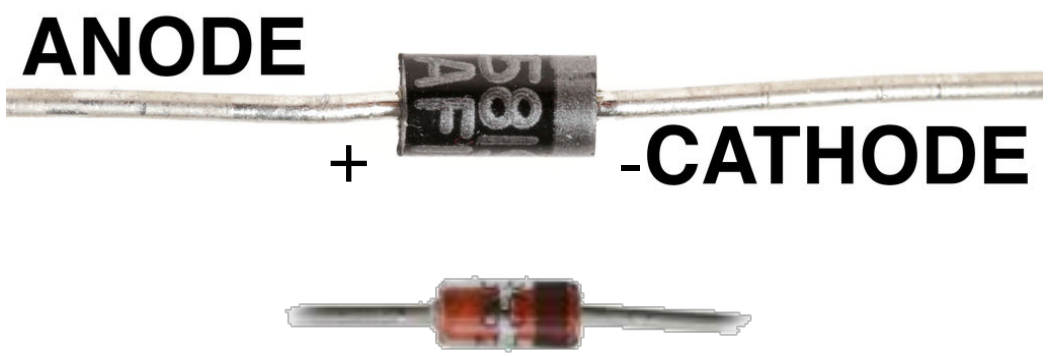

1N4148 Diode

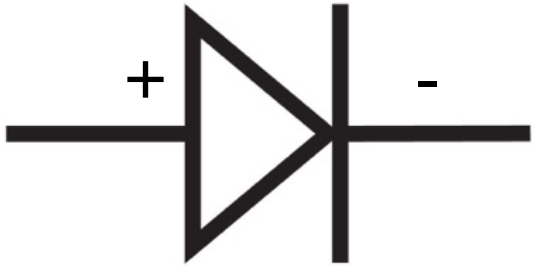

Light Emitting Diode (LED)

- Converts electrical energy into light
- A reversed LED can keep an entire circuit from operating properly by blocking current flow
- Three ways to tell a standard LED's anode from its cathode:
  1. The leg connected to the anode is typically longer than the one connected to the cathode
  2. The body of the LED typically has a flat spot on the cathode side
  3. If you look inside the LED, the cathode is much larger than the anode

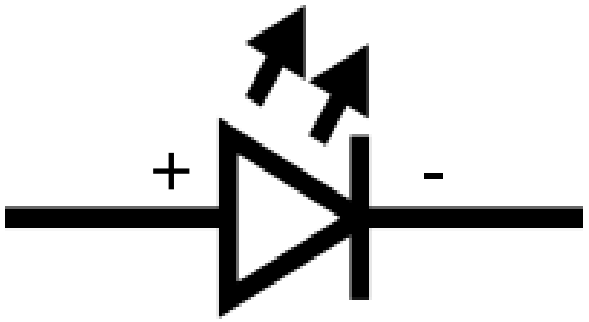

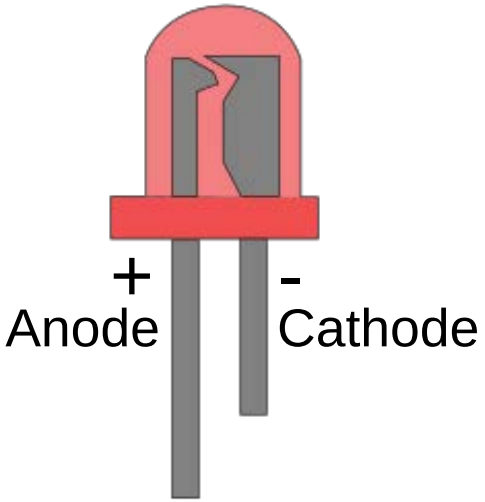

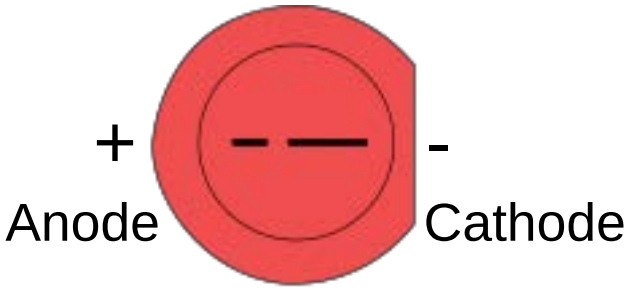

Relay

- A **relay** is an electrically operated switch. Many relays use an electromagnet to mechanically operate a switch, but other operating principles are also used, such as solid-state relays.
- Relays are used where it is necessary to control a circuit by a separate low-power signal, or where several circuits must be controlled by one signal.

Single Pole - Double Throw (SPDT) Sealed Relay

Electrical Reay for controlling an AC circuit (light switch)

Transistor

- A **transistor** is a semiconductor device used to amplify or switch electronic signals and electrical power.
- It has at least three terminals for connection to an external circuit. A current applied to one pair of terminals controls the current through another pair of terminals.
- Because the controlled output power can be higher than the controlling input power, a transistor can amplify a signal.
- On a bi-polar junction transistor (BJT), those pins are labeled collector (C), base (B), and emitter (E).

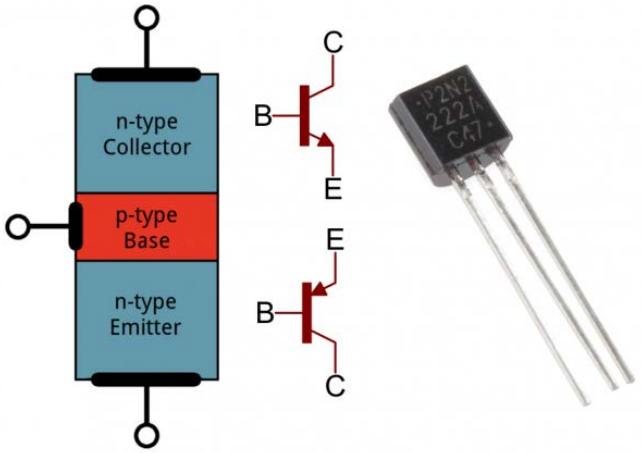

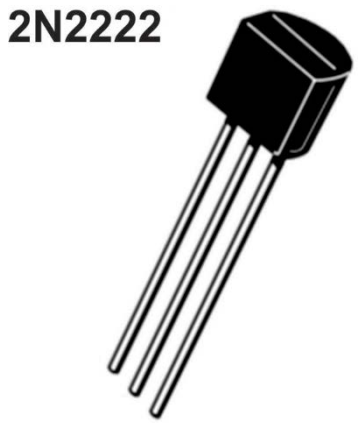

BC337 Transistors have replaced the 2N222 in the SIK

Actuator

- An **actuator** is a component of a machine that is responsible for moving or controlling a mechanism or system. An **actuator** requires a control signal and a source of energy. The control signal is relatively low energy and may be electric current, pneumatic, or hydraulic pressure.
- Two basic motions are linear and rotary:
  - Linear actuators convert energy into straight line motions, typically for positioning applications, and usually have a push and pull function.
  - Rotary actuators convert energy to provide rotary motion, typically for controlling various valves such as a ball or butterfly
- A **servo motor** is used to provide control of a desired operation through the use of feedback.

MATH IN ELECTRONICS

Power Law

- The Power Law describes the relationship of voltage, resistance, and watts.
- Any of these three formulas can be used to find power, depending upon the known variables:

$$P = V \; x \; I$$

$$P = I^2 \; x \; R$$

$$P = \frac{V^2}{R}$$

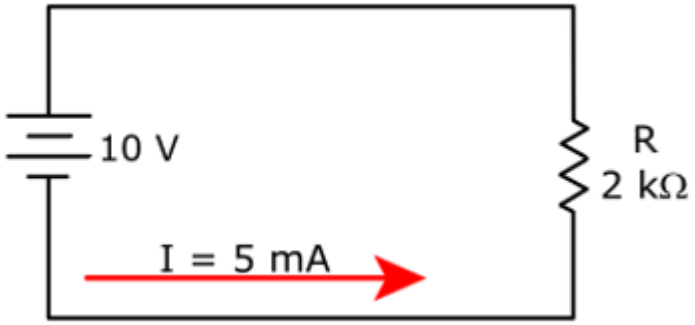

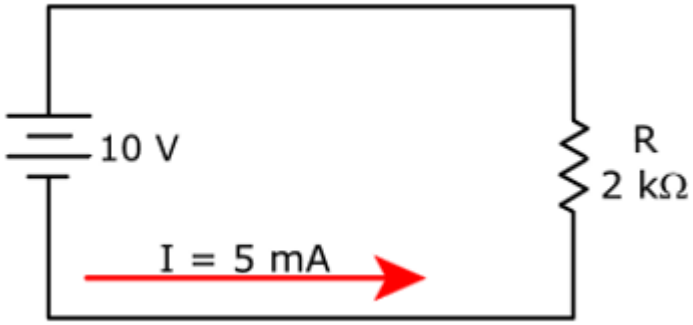

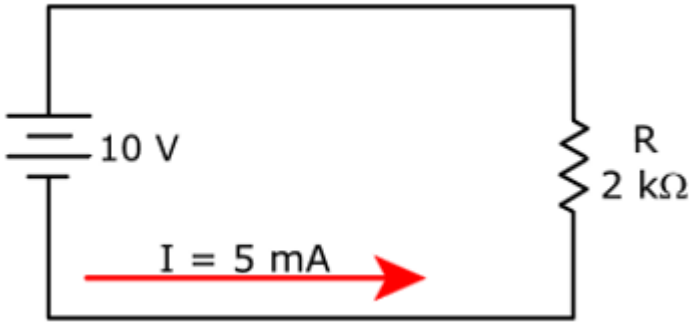

$$P = 10V \; x \; 5mA$$
$$P = 50mW$$

$$P = (5mA^2) \; x \; 2k\Omega$$
$$P = 50mW$$

$$P = \frac{10V^2}{2k\Omega}$$
$$P = 50mW$$

Kirchhoff's Laws

- Which diagram is correct?

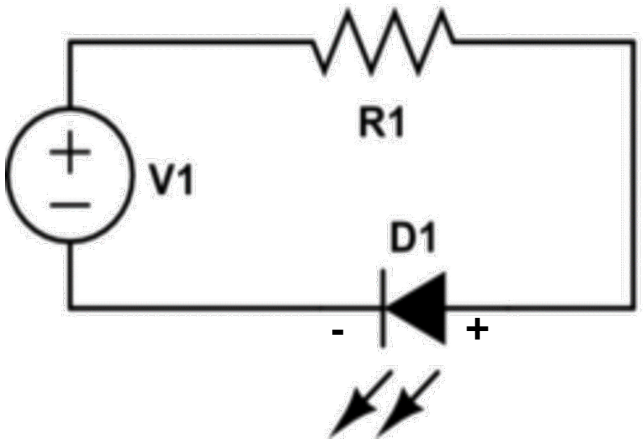

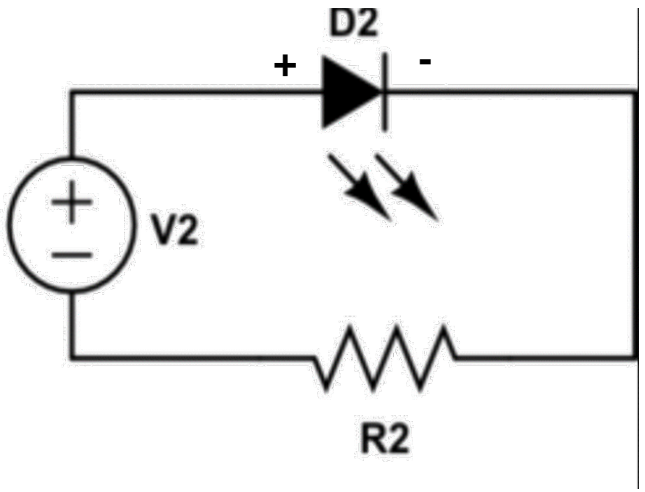

- **Kirchhoff's Current Law** – At any node (junction) in an electrical circuit, the sum of currents flowing into that node is equal to the sum of currents flowing out of that node.

$$\sum_{k=1}^{n} I_k = 0$$

- **Kirchhoff's Voltage Law** – Every component in your circuit has to share the voltage, and the amount of voltage that every part uses together will always equal the amount that's available or the sum of the voltages around any closed loop is zero.

$$\sum_{k=1}^{n} V_k = 0$$

Ohm’s Law

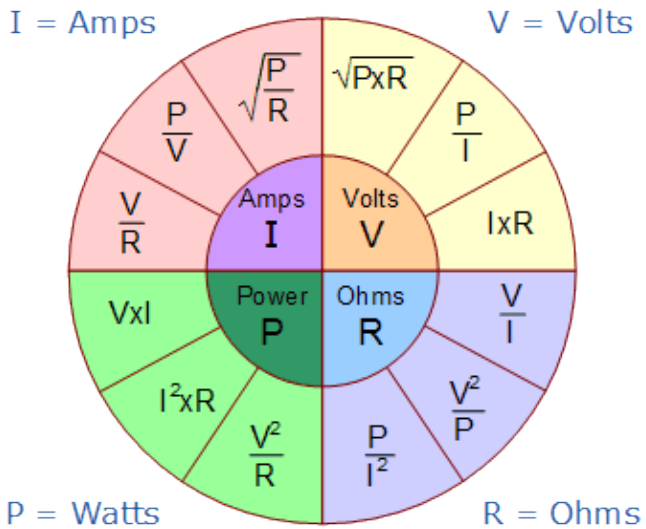

- Georg Ohm found that, at a constant temperature, the electrical current flowing through a fixed linear resistance is directly proportional to the voltage applied across it, and also inversely proportional to the resistance. This relationship between the Voltage, Current and Resistance forms the basis of **Ohms Law**.
- Electrical components are given a “power rating” in watts that indicates the maximum rate at which the component converts the electrical power into other forms of energy such as heat, light or motion (a 100W light bulb).

Ohm's Law Example

- **Voltage** [V = I x R] = 2 x 12Ω = 24V
- **Current** [I = V ÷ R] = 24 ÷ 12Ω = 2A
- **Resistance** [R = V ÷ I] = 24 ÷ 2 = 12 Ω
- **Power** [P = V x I] = 24 x 2 = 48W

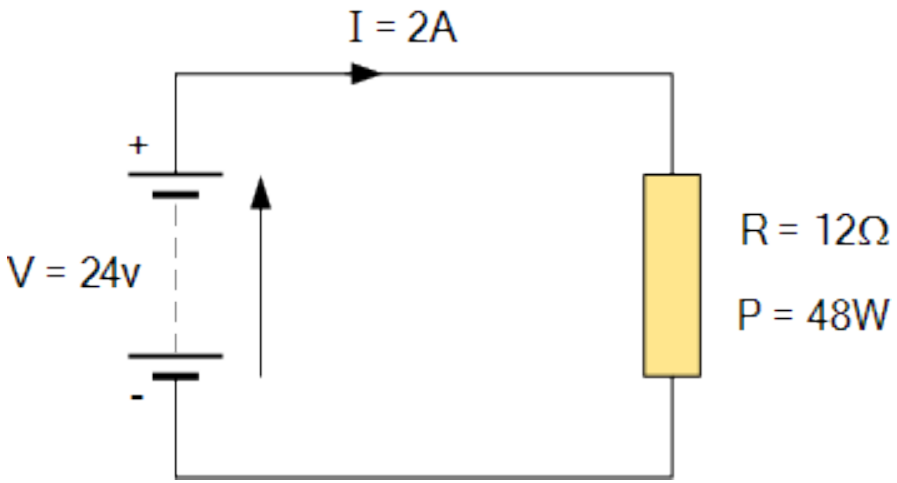

- Power within an electrical circuit is only present when **BOTH** voltage and current are present.
- Generally, electrical power is dissipated in the form of **Heat** (heaters), **Mechanical Work** such as motors, **Energy** in the form of radiated (Lamps) or as stored energy (Batteries).

Ohm's Law

- Use **Ohm's Law** to calculate the size of a Resistor (R) for a LED:
  - V_S = source voltage
  - V_{LED} = forward voltage drop of the LED
  - I_{LED} = current through the LED measured in Amps
  - (current through the circuit is constant)

$$R = \frac{(V_S - VLED)}{I_{LED}}$$

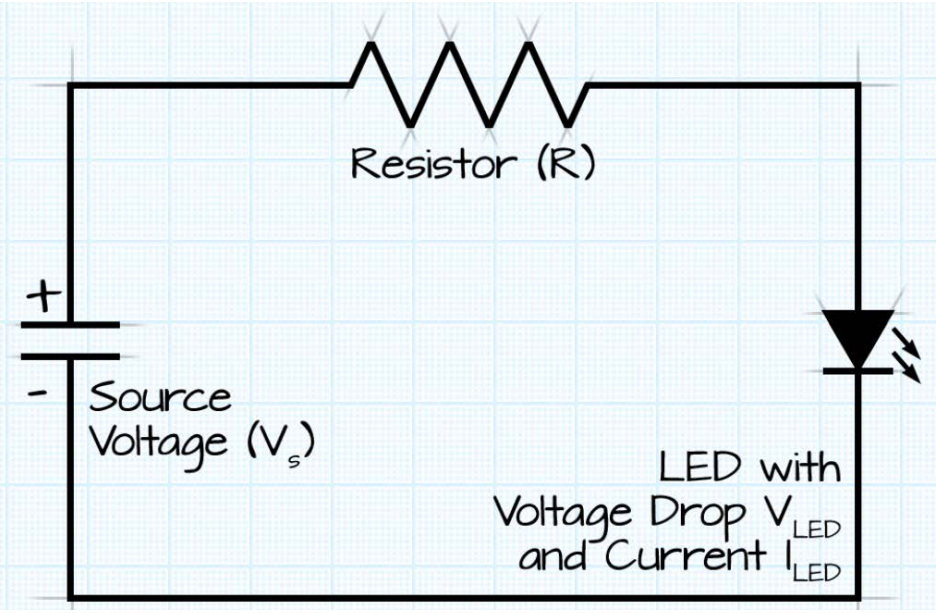

LED Forward Voltage Drop

- Forward Voltage Drop – The voltage used to power a LED
- Resistors limit the flow of electrons in the circuit and protect the LED from trying to draw too much current
- Typical LEDs take a 330 Ohms resistor
- LED sizes: 3mm, 5mm (most common), & 10mm

5mm LED Current = 20mA	Forward Voltage Maximum
Red	2.4V
Orange	2.4V
Yellow	2.4V
Blue	3.4V
Green	3.4V
White	3.4V

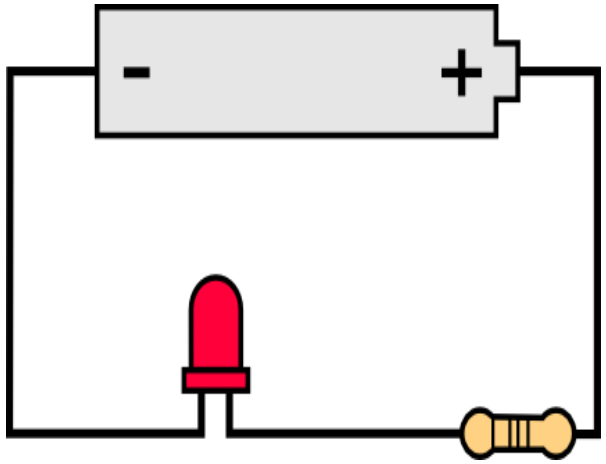

What Size Resistor?

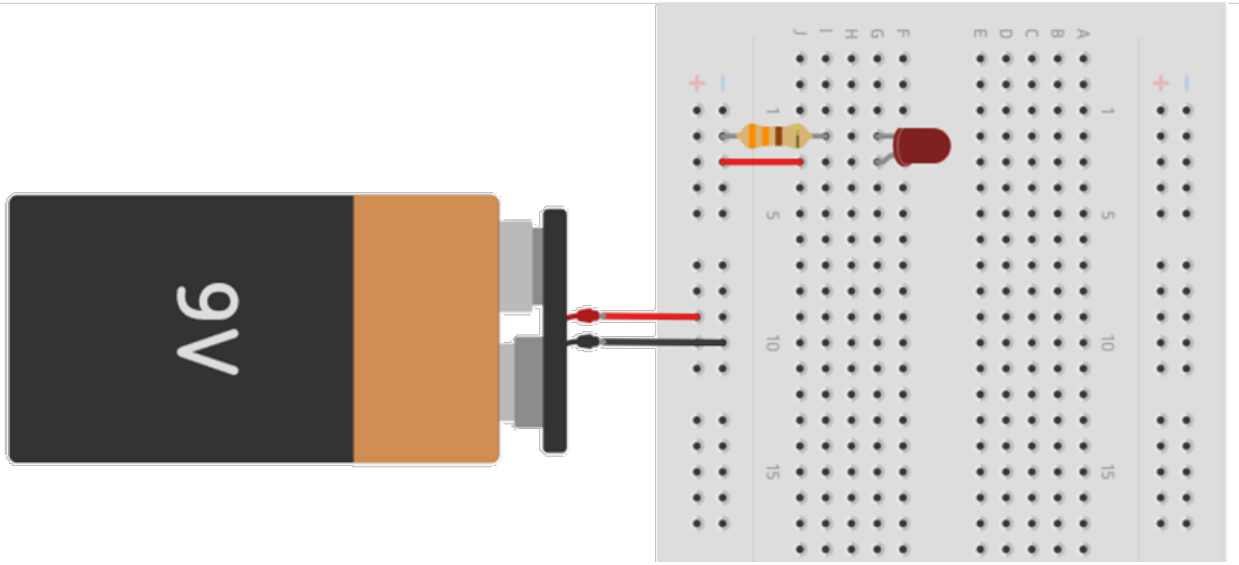

$$R = \frac{(V_S - VLE_D)}{I_{LED}}$$

- Power = 9V
- What size resistor is needed for a 5mm Red LED?

(9V – 2.4V) / 20mA (.02A)

330 Ω

- Power = 5V
- What size resistor is needed for a 5mm Red LED?

(5V – 2.4V) / 20mA (.02A)

130 Ω

Additional Resources

- All About Circuits – https://www.allaboutcircuits.com/
  - Direct Current
  - Ohm's Law
  - Worksheets

- Instructables – https://www.instructables.com/classes/tagged/electronics/
  - Arduino
  - Raspberry Pi
  - Electronics
  - Circuit Board Design

- Ohm's Law Calculator – http://www.ohmslawcalculator.com/led-resistor-calculator

CISCO

EDUCATION SERVICE CENTER
REGION 11
Academy Support/Instructor Training Center